.104 POLISHED 302/304 STAINLESS STEEL

BRONZE PLASTIC OR STAINLESS SHEAVE

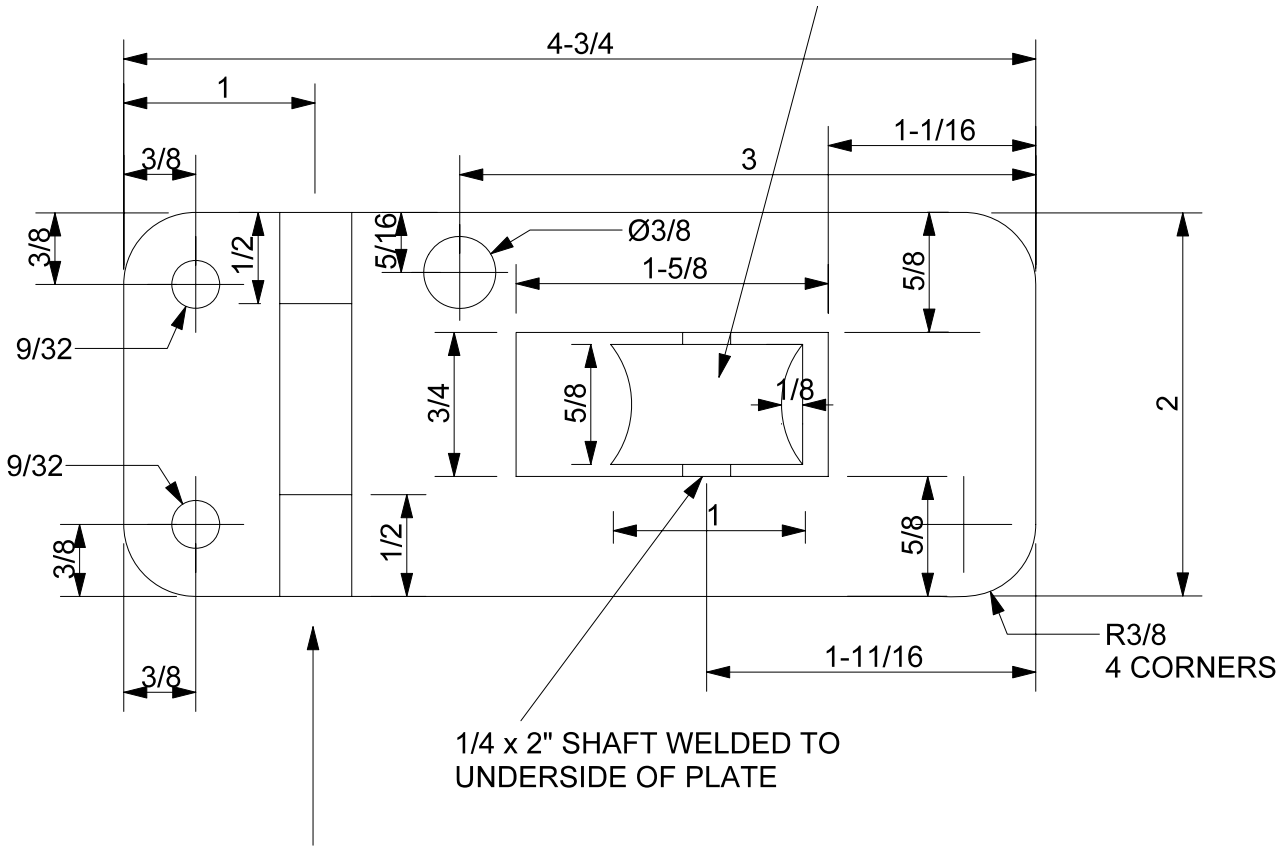

HINGE LINE

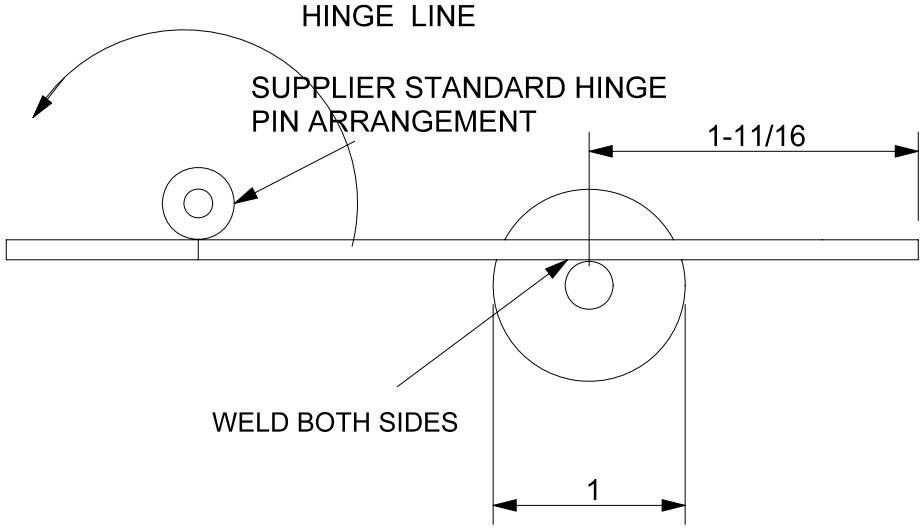

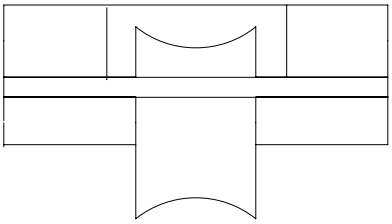

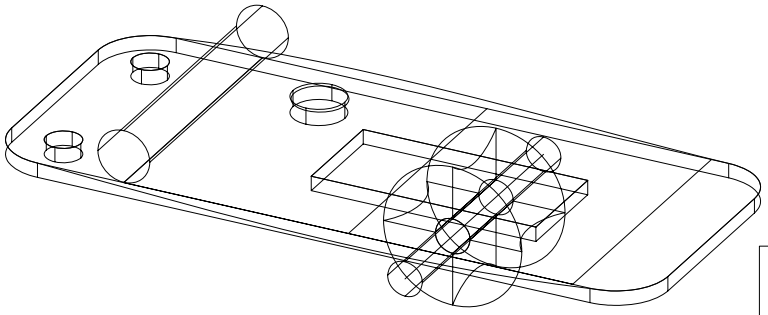

HINGE DAGGERBOARD ROPE	
MACGREGOR 26M: PER BOAT	1 EA
DRAWING DATE:	NOV 3 2005
MACGREGOR PART NUMBER:	156